GULFSTREAM
TOWERS

FL208
HWY 528 & 407

SR 407 / CHALLENGER
MEMORIAL PARKWAY
ORLANDO, FLORIDA 32927
(BREVARD COUNTY)

PROPOSED 199' MONOPOLE TOWER AND COMMUNICATION FACILITY

LOCAL MAP

VICINITY MAP

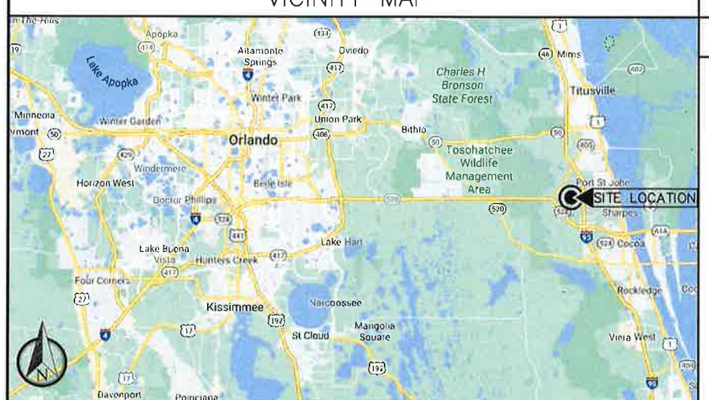

DRIVING DIRECTIONS

PROJECT SUMMARY

GULFSTREAM TOWERS, LLC IS PROPOSING TO CONSTRUCT A UNMANNED TELECOMMUNICATIONS FACILITY CONSISTING OF THE INSTALLATION OF A 199' MONOPOLE TOWER AND COMMUNICATIONS FACILITY WITHIN A 50'x50' FENCED COMPOUND. FUTURE WIRELESS BASE STATION EQUIPMENT WILL BE INSTALLED UNDER SEPARATE PERMIT TO PROVIDE RADIO TRANSMISSION SERVICES FOR PERSONAL COMMUNICATIONS AS WELL AS EMERGENCY 911 SERVICE.

PROJECT DATA

PARCEL ID #:	~~23-34-25-00-752~~
LATITUDE:	28° 27' 3.24 N (NAD83)
LONGITUDE:	80° 52' 16.57 W (NAD83)
GROUND ELEVATION:	~~16.2 (NAVD88)~~ 1
JURISDICTION:	BREVARD COUNTY
ZONING:	GU
FUTURE LAND USE:	AGRICULTURAL
PROPERTY ADDRESS:	SR407/CHALLENGER MEMORIAL PARKWAY COCOA, FLORIDA 32927
POWER:	FLORIDA POWER AND LIGHT
TELEPHONE:	AT&T

DESIGN CRITERIA

DESIGN WIND SPEED: 136 MPH (PER FBC) & TIA/EIA 222-H

EXPOSURE CATEGORY: C
RISK CATEGORY: II

FLOODPLAIN DESIGNATION: COMMUNITY PANEL NO. 125092 0325 G OF THE FLOOD INSURANCE RATE MAPS FOR BREVARD CO, FLORIDA, DATED 03/17/14 THE SUBJECT PROPERTY IS IN FIRM ZONE "X", OUTSIDE THE 500 YEAR FLOOD PLAIN

CONTACTS

APPLICANT
GULFSTREAM TOWERS
127 W. FAIRBANKS AVE, #469
WINTER PARK, FL 32789
CONTACT: MIKE BURKHEAD (407) 617-0167

PROPERTY OWNER CONTACT:

LANDLORD: TERRANCE A. CRONIN, JR. & KATHLEEN M. HUBBARD
ADDRESS: 1399 S. HARBOR CITY BLVD
CITY, STATE, ZIP: MELBOURNE, FLORIDA 32901

SMW ENGINEERING GROUP INC. PROJECT MANAGER:
JEREMY D. SHARIT, PE (205) 453-1892

APPLICABLE CODES

THE CONTRACTOR'S WORK SHALL COMPLY WITH ALL APPLICABLE NATIONAL, STATE, AND LOCAL CODES AS ADOPTED BY THE LOCAL AUTHORITY HAVING JURISDICTION (AHJ) OVER THE LOCATION. THE EDITION OF THE AHJ ADOPTED CODES AND STANDARDS IN EFFECT ON THE DATE OF CONTRACT AWARD SHALL GOVERN THE DESIGN.

BUILDING CODE: FLORIDA BUILDING CODE 7TH EDITION (2020) & TIA/EIA 222-H.

NATIONAL ELECTRICAL CODE: 2017 EDITION.

ELECTRICAL CODE: NATIONAL FIRE PROTECTION ASSOCIATION (NFPA) 70

MECHANICAL CODE: MECHANICAL CODE, 6TH EDITION.

FIRE CODE: FLORIDA FIRE PREVENTION CODE, 6TH EDITION.

LIFE SAFETY CODE: NFPA-101-2015

THE CONTRACTOR'S WORK SHALL COMPLY WITH THE LATEST EDITION OF THE FOLLOWING STANDARDS; AMERICAN CONCRETE INSTITUTE (ACI) 318-11 BUILDING CODE REQUIREMENTS FOR STRUCTURAL CONCRETE: AMERICAN INSTITUTE OF STEEL CONSTRUCTION (AISC), 14th EDITION: TELECOMMUNICATIONS INDUSTRY ASSOCIATION (TIA) 222-G, STRUCTURAL STANDARDS FOR STEEL ANTENNA TOWER AND ANTENNA SUPPORTING STRUCTURES: TIA-607-B, COMMERCIAL BUILDING GROUNDING AND BONDING REQUIREMENTS FOR TELECOMMUNICATIONS.

INSTITUTE FOR ELECTRICAL AND ELECTRONICS ENGINEERS (IEEE) 81, GUIDE FOR MEASURING EARTH RESISTIVITY, GROUND IMPEDANCE, AND EARTH SURFACE POTENTIALS OF A GROUND SYSTEM: IEEE 1100 (2005) RECOMMENDED PRACTICE FOR POWERING AND GROUNDING OF ELECTRONIC EQUIPMENT.

IEEE C62.41, GUIDE ON THE SURGE ENVIRONMENT IN LOW-VOLTAGE AC POWER CIRCUITS (FOR LOCATION CATEGORY "C3" AND "HIGH SYSTEM EXPOSURE").

TELCORDIA GR-1275, GENERAL INSTALLATION REQUIREMENTS: TELCORDIA GR-1503, COAXIAL CABLE CONNECTIONS: ANSI T1.311, FOR TELECOM – DC POWER SYSTEMS – TELECOM, ENVIRONMENTAL PROTECTION.

INDEX OF DRAWINGS

SHT. NO.	DESCRIPTION	REV. NO.
T-1	TITLE SHEET	0
G-1	GENERAL NOTES	0
S1	SURVEY (1 OF 3)	1
S2	SURVEY (2 OF 3)	1
S2	SURVEY (3 OF 3)	1
C-1	OVERALL SITE PLAN	1
C-2	COMPOUND LAYOUT & TOWER ELEVATION	1
C-3	CONSTRUCTION DETAILS	0
L-1	LANDSCAPE PLAN & PLANTING DETAILS	1
L-2	IRRIGATION PLAN & DETAILS	1
E-1	SITE SERVICE ROUTING & GROUNDING PLAN	1
E-2	SINGLE LINE DIAGRAM & H-FRAME DETAILS	0
E-3	ELECTRICAL DETAILS	0

REV	DATE	DESCRIPTION
0	10/06/22	PERMIT
1	02/13/23	COUNTY COMMENTS

PROJECT NO.:	21-5068
DRAWN BY:	R. SCHMIDT
PROJECT MANAGER:	R. SCHMIDT
CHECKED BY:	J. SHARIT

THIS DRAWING IS COPYRIGHTED AND IS THE SOLE PROPERTY OF THE OWNER. IT IS PRODUCED SOLELY FOR USE BY THE OWNER AND ITS AFFILIATES. REPRODUCTION OR USE OF THIS DRAWING AND/OR THE INFORMATION CONTAINED IN IT IS FORBIDDEN WITHOUT THE WRITTEN PERMISSION OF THE OWNER.

SMW ENGINEERING GROUP, INC.
TOGETHER PLANNING A BETTER TOMORROW
12979 N. TELECOM PARKWAY
TEMPLE TERRACE, FL 33637
(813) 615-1422
CERTIFICATE OF AUTHORIZATION 33693

GULFSTREAM TOWERS
127 W.FAIRBANKS AVE, STE 469
WINTER PARK, FLORIDA 32789

JEREMY SHARIT LICENSE No. 75137 STATE OF FLORIDA PROFESSIONAL ENGINEER
JEREMY D. SHARIT P.E. FL LICENSE 75137

FL208
SR528 & SR407

SR407 / CHALLENGER MEMORIAL PARKWAY
(ADDRESS TO BE ASSIGNED)
COCOA, FLORIDA 32927
(BREVARD COUNTY)

SHEET NAME
TITLE SHEET

SHEET NUMBER
T-1

1. FOR THE PURPOSES OF THESE CONSTRUCTION DRAWINGS, THE FOLLOWING DEFINITIONS SHALL APPLY:

   OWNER – GULFSTREAM TOWERS
   ENGINEER – SMW ENGINEERING GROUP INC.
   CONTRACTOR – GENERAL CONTRACTOR (CONSTRUCTION)

2. A 20-FOOT HORIZONTAL CLEARANCE DISTANCE SHALL BE MAINTAINED FROM ALL EXISTING POWER LINES.

3. THE CONTRACTOR'S USE OF A CONSTRUCTION STAGING AREA SHALL BE COORDINATED WITH THE OWNER WELL IN ADVANCE OF THE CONSTRUCTION START DATE.

4. LABOR, MATERIAL, TOOLS, EQUIPMENT, TRANSPORTATION AND TEMPORARY POWER SERVICES NECESSARY FOR AND INCIDENTAL TO COMPLETION OF ALL WORK SHALL BE PROVIDED AS INDICATED ON THE DRAWINGS AND/OR AS SPECIFIED HEREIN. LABOR AND MATERIALS SHALL BE FURNISHED AS REQUIRED FOR COMPLETE SYSTEMS, INCLUDING ALL ELEMENTS OBVIOUSLY OR REASONABLY INCIDENTAL TO A COMPLETE INSTALLATION, WHETHER OR NOT SPECIFICALLY INDICATED ON THE PLANS.

5. FOR TASKS REQUIRED TO BE PERFORMED BUT NOT CLEARLY DEFINED OR IDENTIFIED BY THE CONTRACT DOCUMENTS, THE CONTRACTOR SHALL NOT START WORK ON SUCH TASKS WITHOUT HAVING RECEIVED WRITTEN AUTHORIZATION FROM THE CONSTRUCTION MANAGER TO PROCEED.

6. THE DRAWINGS ARE DIAGRAMMATIC AND INDICATE THE GENERAL ARRANGEMENT OF SYSTEMS AND EQUIPMENT UNLESS OTHERWISE INDICATED BY DIMENSIONS OR DETAILS. EXACT EQUIPMENT LOCATIONS MAY BE MODIFIED AS REQUIRED BY ACTUAL FIELD CONDITIONS. IF THE SPECIFIED EQUIPMENT CANNOT BE INSTALLED AS SHOWN ON THESE DRAWINGS, CONTRACTOR SHALL PROPOSE AN ALTERNATIVE INSTALLATION FOR APPROVAL BY THE ENGINEER AND THE CONSTRUCTION MANAGER.

7. THE CONTRACTOR SHALL OBTAIN, PAY FOR AND DELIVER ALL REQUIRED PERMITS, CERTIFICATES OF INSPECTION, INCLUDING UTILITY CONNECTION FEES, ETC., REQUIRED BY THE AUTHORITIES HAVING JURISDICTION AND SHALL DELIVER SUCH DOCUMENTS TO THE OWNER PRIOR TO FINAL ACCEPTANCE OF THE WORK.

8. THE CONTRACTOR'S OPERATIONS SHALL BE CONFINED TO AREAS OF NEW CONSTRUCTION.

9. ALL NECESSARY PROVISIONS SHALL BE MADE TO PROTECT EXISTING IMPROVEMENTS, PAVING, CURBS, GALVANIZED SURFACES, ETC, AND THE CONTRACTOR SHALL BE RESPONSIBLE FOR ANY DAMAGE TO SAME RESULTING FROM THE CONSTRUCTION WORK. ALL DISTURBED AND DAMAGED AREAS SHALL BE RESTORED TO THEIR ORIGINAL CONDITION OR BETTER UPON COMPLETION OF ALL WORK TO THE SATISFACTION OF THE CONSTRUCTION MANAGER.

10. THE FOLLOWING CLEANUP TASKS SHALL BE PERFORMED AS FOLLOWS: (1) ON A DAILY BASIS, KEEP THE GENERAL AREA CLEAN AND HAZARD FREE, REMOVING ALL WASTE, DEBRIS AND TRASH FROM THE SITE AND DISPOSING OF SAME IN A LEGAL MANNER. (2) UPON COMPLETION, LEAVE THE PREMISES IN A CLEAN CONDITION AND FREE FROM PAINT SPOTS, DUST, OR SMUDGES OF ANY NATURE.

11. ALL EQUIPMENT AND MATERIALS SHALL BE INSTALLED IN ACCORDANCE WITH THE RESPECTIVE MANUFACTURER'S RECOMMENDATIONS EXCEPT WHERE IT IS SPECIFICALLY INDICATED OTHERWISE IN THE CONTRACT DOCUMENTS OR WHERE LOCAL CODES OR REGULATIONS TAKE PRECEDENCE.

12. ALL WORK PERFORMED AND MATERIALS INSTALLED SHALL BE IN STRICT ACCORDANCE WITH ALL APPLICABLE CODES, REGULATIONS AND ORDINANCES. THE CONTRACTOR SHALL GIVE ALL NOTICES AND COMPLY WITH ALL LAWS, ORDINANCES, RULES, REGULATIONS AND LAWFUL ORDERS OF ANY PUBLIC AUTHORITY HAVING JURISDICTION OVER THE PERFORMANCE OF THE WORK. MECHANICAL AND ELECTRICAL SYSTEMS SHALL BE INSTALLED IN ACCORDANCE WITH ALL APPLICABLE MUNICIPAL AND UTILITY COMPANY SPECIFICATIONS AS WELL AS LOCAL AND STATE CODES, ORDINANCES AND APPLICABLE REGULATIONS.

13. THE CONTRACTOR SHALL SUPERVISE AND DIRECT THE WORK AT ALL TIMES, USING THE BEST SKILLS AND ATTENTION. HE SHALL BE SOLELY RESPONSIBLE FOR ALL OF THE CONSTRUCTION MEANS, METHODS, TECHNIQUES, SEQUENCES AND PROCEDURES AND FOR COORDINATING ALL PORTIONS OF THE WORK, INCLUDING CONTACT AND COORDINATION WITH THE CONSTRUCTION MANAGER AND WITH THE OWNER'S AUTHORIZED REPRESENTATIVE.

14. WITHIN TEN (10) WORKING DAYS AFTER PROJECT COMPLETION, THE CONTRACTOR SHALL PROVIDE A COMPLETE SET OF AS-BUILT DRAWINGS, CYLINDER TESTS, AND OTHER CLOSEOUT DOCUMENTATION AS REQUIRED BY THE OWNER. ALL SYSTEMS SHALL BE COMPLETELY ASSEMBLED, TESTED, ADJUSTED AND DEMONSTRATED TO BE READY FOR OPERATION PRIOR TO THE OWNER'S ACCEPTANCE.

GENERAL NOTES 1

1. THE APPROPRIATE UTILITY LOCATING SERVICES SHALL BE CONTACTED PRIOR TO THE START OF CONSTRUCTION IN ORDER TO VERIFY THE EXACT LOCATION OF ALL EXISTING UNDERGROUND UTILITIES.

2. THE INSTALLATION OF NEW UTILITIES SHALL BE COORDINATED WITH LOCAL AUTHORITIES.

3. ALL EXISTING ACTIVE SEWER, WATER, GAS, ELECTRIC AND OTHER UTILITIES, WHERE ENCOUNTERED IN THE WORK, SHALL BE PROTECTED AT ALL TIMES. WHERE REQUIRED FOR THE PROPER EXECUTION OF THE WORK, SUCH UTILITIES SHALL BE RELOCATED AS DIRECTED BY THE CONSTRUCTION MANAGER. EXTREME CAUTION SHALL BE USED WHEN EXCAVATING OR DRILLING PIERS AROUND OR NEAR UTILITIES.

4. RUBBISH, STUMPS, DEBRIS, STICKS, STONES AND OTHER REFUSE SHALL BE REMOVED FROM THE SITE AND DISPOSED OF LEGALLY.

5. ALL EXISTING INACTIVE SEWER, WATER, GAS, ELECTRIC AND OTHER UTILITIES THAT INTERFERE WITH THE EXECUTION OF THE WORK SHALL BE REMOVED AND/OR CAPPED, PLUGGED OR OTHERWISE DISCONTINUED AT POINTS THAT WILL NOT INTERFERE WITH THE EXECUTION OF THE WORK, SUBJECT TO THE APPROVAL OF THE LANDLORD AND/OR LOCAL UTILITIES.

6. DISTURBANCE TO THE EXISTING SITE DURING CONSTRUCTION SHALL BE MINIMIZED.

7. ANY AREAS OF THE CONSTRUCTION SITE DISTURBED BY THE WORK AND NOT COVERED BY THE TOWER, EQUIPMENT OR DRIVEWAY, SHALL BE GRADED TO A UNIFORM SLOPE. SUCH GRADING SHALL CAUSE SURFACE WATER TO FLOW AWAY FROM ANY EQUIPMENT SHELTER AND TOWER AREAS AND THE SOIL SHALL BE STABILIZED TO PREVENT EROSION. EROSION CONTROL MEASURES,IF REQUIRED DURING CONSTRUCTION, SHALL BE IN CONFORMANCE WITH THE LOCAL GUIDELINES FOR EROSION AND SEDIMENT CONTROL.

8. THE SUB-GRADE SHALL BE COMPACTED AND BROUGHT TO A UNIFORM GRADE PRIOR TO FINISHED SURFACE APPLICATION.

9. BACKFILL SHALL CONSIST OF CLEAN SAND FILL APPROVED FOR USE BY THE ENGINEER. NO UNAPPROVED MATERIAL WILL BE ALLOWED. CLEAN SAND FILL SHALL BE FREE OF ALL ROOTS, BOULDERS, OR OTHER DELETERIOUS MATERIAL.

10. THE CONTRACTOR SHALL RESTORE ALL DISTURBED AREAS TO EQUAL TO OR BETTER CONDITION THAN ORIGINAL.

11. SITE SIGNAGE SHALL BE PROVIDED IN ACCORDANCE WITH THE TECHNICAL SPECIFICATIONS FOR SUCH SIGNAGE AS MAY BE CONTAINED IN THESE DRAWINGS.

SITE WORK NOTES 2

1. MATERIAL:
   A. ALL STRUCTURAL STEEL WORK SHALL CONFORM TO THE LATEST EDITION OF THE AISC "STEEL CONSTRUCTION MANUAL".
   B. ALL STRUCTURAL STEEL WF BEAMS SHALL BE ASTM A992 AND "HOT DIPPED" GALVANIZED IN ACCORDANCE WITH ASTM A123 AND ASTM A153 STANDARDS.
   C. ALL STRUCTURAL PLATES, ANGLES, AND CHANNELS SHALL BE ASTM A36 AND "HOT DIPPED" GALVANIZED IN ACCORDANCE WITH ASTM A123 AND ASTM A153 STANDARDS.
   D. ALL TS MEMBERS SHALL BE ASTM A500 GRADE B (Fy=46ksi), AND "HOT DIPPED" GALVANIZED IN ACCORDANCE WITH ASTM A123 AND ASTM A153 STANDARDS.
   E. ALL STRUCTURAL PIPE MEMBERS SHALL BE ASTM A500 GRADE B (Fy=42ksi), AND "HOT DIPPED" GALVANIZED IN ACCORDANCE WITH ASTM A123 AND ASTM A153 STANDARDS.
   F. ALL NON_STRUCTURAL PIPE MEMBERS SHALL BE ASTM A53 GRADE B, AND "HOT DIPPED" GALVANIZED IN ACCORDANCE WITH ASTM A123 AND ASTM A153 STANDARDS.
2. DESIGN, FABRICATION, AND CONSTRUCTION OF ALL CONNECTIONS SHALL CONFORM TO AISC STEEL CONSTRUCTION MANUAL.
3. WELDING:
   A. ALL WELDS, WELDERS, AND WELD INSPECTIONS SHALL CONFORM TO THE REQUIREMENTS OF AWS D 1.1, LATEST REVISION.
   B. ALL WELDS SHALL BE MADE WITH E70XX LOW HYDROGEN ELECTRODES.
   C. ALL STEEL SHALL BE SPRAY GALVANIZED AFTER WELDING.
4. ALL BOLTS SHALL BE GALVANIZED ¾" DIAMETER, A325-N, UNLESS NOTED OTHERWISE AND TIGHTENED TO A "SNUG TIGHT" CONDITION AS DEFINED BY AISC. SECURE NUT WITH LOCKING WASHER.
5. ANCHOR BOLTS SHALL CONFORM TO ASTM A307, UNLESS NOTED OTHERWISE.
6. THE CONTRACTOR/STEEL FABRICATOR SHALL LOCATE ANY REINFORCEMENT IN THE STRUCTURAL MEMBERS IN SUCH A MANNER SO THAT THERE WILL NOT BE CONFLICT WITH THE REINFORCEMENT WHEN INSTALLING ANCHORS. THE ANCHORS SHALL BE INSTALLED PER THE MANUFACTURER'S INSTRUCTION.
7. THE CONTRACTOR/STEEL FABRICATOR SHALL CONFORM TO THE MINIMUM EDGE DISTANCE REQUIREMENTS IN ACCORDANCE WITH THE AISC MANUAL OF STEEL CONSTRUCTION.
8. ALL STRUCTURAL STEEL SHALL BE FABRICATED TO FIT AT BOLTED CONNECTIONS WITHIN 1/16 INCH TOLERANCE. STRUCTURAL STEEL SHALL NOT BE FLAME CUT UNDER ANY CIRCUMSTANCES WITHOUT APPROVAL OF THE ENGINEER.
9. THE CONTRACTOR/STEEL FABRICATOR SHALL CAP OR SEAL ALL PIPES AS REQUIRED TO PREVENT RAINWATER INTRUSION.
10. THE CONTRACTOR/STEEL FABRICATOR SHALL SUBMIT SHOP DRAWINGS FOR REVIEW PRIOR TO ANY STEEL FABRICATION. AT THE CONTRACTOR'S OPTION, FIELD SPLICES MAY BE USED FOR ERECTION PURPOSES. IF FIELD SPLICES ARE USED, THE SHOP DRAWINGS SHALL INCLUDE ALL DETAILS FOR THE PROPOSED FIELD SPLICES.
11. AT THE CONTRACTOR'S OPTION, SHOP WELDS MAY BE USED INSTEAD OF FIELD WELDS.
12. SUBMIT ORIGINAL SHOP DRAWINGS, INCLUDING COMPLETE DETAILS, SCHEDULES OF FABRICATION AND ASSEMBLY, PROCEDURES, AND DIAGRAMS. INCLUDE DETAILS OF CUTS, CONNECTIONS, CAMBER, HOLE, AND OTHER PERTINENT DATA. INDICATE WELDS BY STANDARD AWS A2.1 AND A2.4 SYMBOLS, AND SHOW SIZE, LENGTH, AND TYPE OF WELD. PROVIDE SETTING DRAWINGS, TEMPLATES, AND DIRECTIONS FOR INSTALLATION OF ANCHOR BOLTS AND OTHER ANCHORAGES TO BE INSTALLED AS WORK OF OTHERS' SECTIONS.

STRUCTURAL STEEL NOTES 3

REV	DATE	DESCRIPTION
0	10/06/22	PERMIT
1	02/13/23	COUNTY COMMENTS

PROJECT NO.:	21-5068
DRAWN BY:	R. SCHMIDT
PROJECT MANAGER:	R. SCHMIDT
CHECKED BY:	J. SHARIT

THIS DRAWING IS COPYRIGHTED AND IS THE SOLE PROPERTY OF THE OWNER. IT IS PRODUCED SOLELY FOR USE BY THE OWNER AND ITS AFFILIATES. REPRODUCTION OR USE OF THIS DRAWING AND/OR THE INFORMATION CONTAINED IN IT IS FORBIDDEN WITHOUT THE WRITTEN PERMISSION OF THE OWNER.

SMW ENGINEERING GROUP, INC.
TOGETHER PLANNING A BETTER TOMORROW
12979 N TELECOM PARKWAY
TEMPLE TERRACE, FL 33637
(813) 615-1422
CERTIFICATE OF AUTHORIZATION 33693

GULFSTREAM TOWERS
127 W.FAIRBANKS AVE, STE 469
WINTER PARK, FLORIDA 32789

THIS DOCUMENT HAS BEEN ELECTRONICALLY SIGNED AND SEALED BY JEREMY D. SHARIT, PE (#75137) USING A DIGITAL SIGNATURE IN ACCORDANCE WITH F.A.C. 61G15-23.004, WITH A DIGITAL CERTIFICATE ISSUED BY ENTRUST, INC. PLEASE REFERENCE SHEET T1 TO VIEW THE SIGNATURE AND VERIFY ITS PROPERTIES. PRINTED COPIES OF THIS DOCUMENT ARE NOT CONSIDERED SIGNED AND SEALED AND THE SIGNATURE MUST BE VERIFIED ON ANY ELECTRONIC COPIES.
JEREMY D. SHARIT P.E. FL LICENSE 75137

FL208
SR528 & SR407

SR407 / CHALLENGER MEMORIAL PARKWAY
(ADDRESS TO BE ASSIGNED)
COCOA, FLORIDA 32927
(BREVARD COUNTY)

SHEET NAME
GENERAL NOTES

SHEET NUMBER
G-1

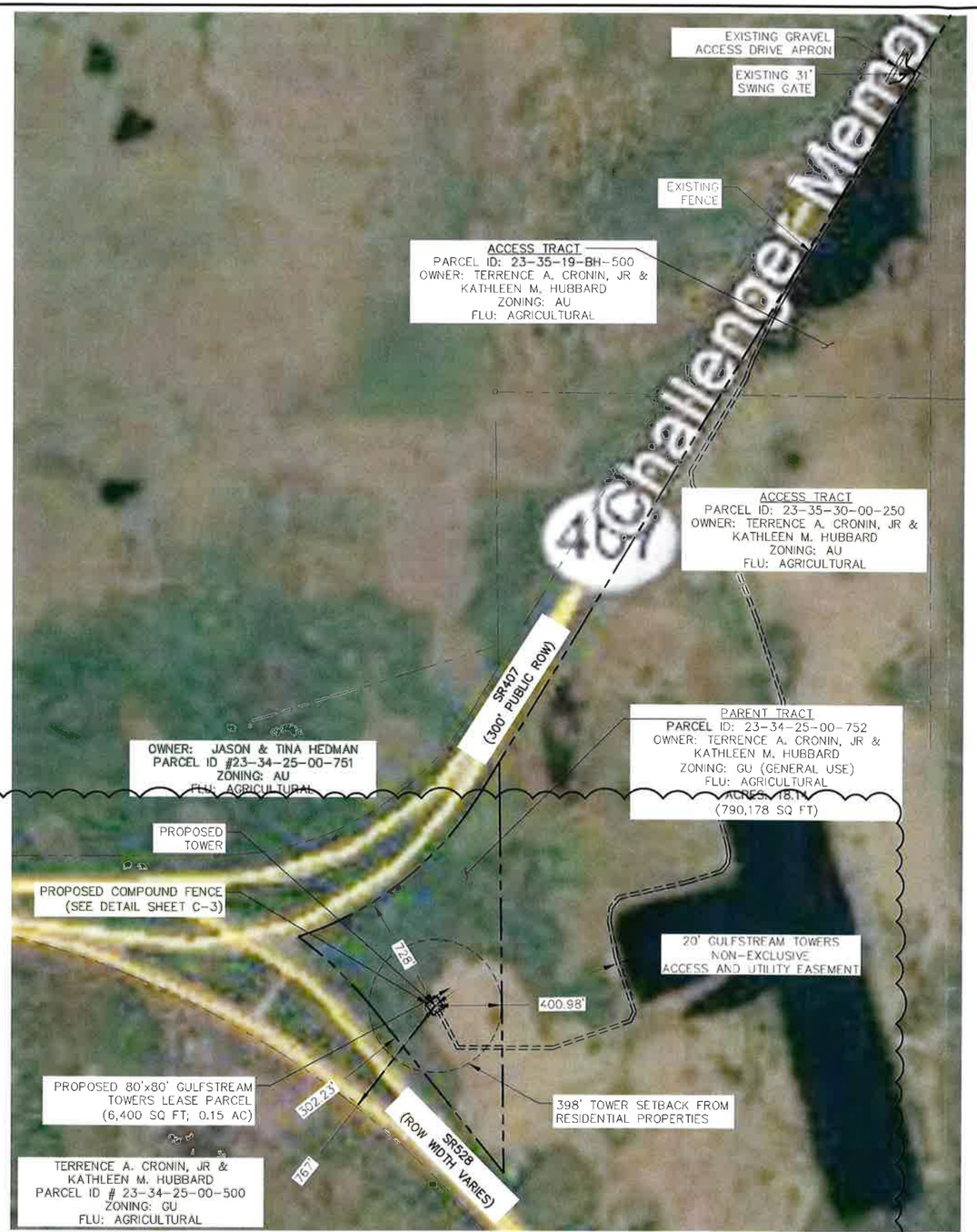

FLOODPLAIN DESIGNATION: COMMUNITY PANEL NO. 125092 0325 G OF THE FLOOD INSURANCE RATE MAPS FOR BREVARD CO, FLORIDA, DATED 03/17/14 THE SUBJECT PROPERTY IS IN FIRM ZONE "X", OUTSIDE THE 500 YEAR FLOOD PLAIN

1

OVERALL SITE PLAN — SCALE AS NOTED — 1

FL208 Hwy 528 & 407 Site Data

Parent Tract	790,178.00 SF /	18.140
Tower Lease Area	6,400.00 SF	
Total (Development Area)	**6,400.00 SF /**	**0.147**
Impervious Area		
8' Diameter Caisson	64.0 SF	
10'x20' Equipment Pad + additional area if needed (Future)	200.0 SF	
10'x20' Equipment Pad + additional area if needed (Future)	200.0 SF	
10'x20' Equipment Pad + additional area if needed (Future)	200.0 SF	
10'x20' Equipment Pad + additional area if needed (Future)	200.0 SF	
Total (Caisson and Proposed/Future Pads)	**864.00 SF /**	**0.020**
(% Lease Area)	13.50%	
(% Parent Tract)	0.11%	
Pervious Area		
Proposed Development (Includes Tower Caisson and Future Pads)		
Mulched Compound Area* (Proposed)	1,636.00 SF /	0.038
Landscaped Area	3,900.00 SF	
Total	**5,536.00 SF /**	**0.127**
(% Development Area)	86.50%	
(% Parent Tract)	0.70%	

*Not Compacted; excludes Pads/Caisson

STORMWATER NOTE:

THE SITE AREA BEING DEVELOPED IS 6,400 SQ FT, 864 SQ FT OF THAT IS AREA IS IMPERVIOUS, AND 5,536 SQ FT IS PERVIOUS. THE CAPTURE RATIO OF THE UNDEVELOPED-NOT COMPACTED AREA (5536 SQ FT/864 SQ FT) IS 640%. THE SITE COMPOUND AND LEASE AREA WILL ACT AS THE TREATMENT AREA FOR OUR STORMWATER RUNOFF.

PERVIOUS/IMPERVIOUS DATA — NTS — 2

SETBACKS SUMMARY

PARENT TRACT LINE	TOWER SETBACKS*	TOWER SETBACKS TO ADJACENT PL
NORTHWEST	728'	
SOUTHWEST	302.23'	767'
EAST	400.98	

* MEASURED TO CENTER OF TOWER FROM PROPERTY LINE

1

TOWER SETBACKS — NTS — 3

REV	DATE	DESCRIPTION
0	10/06/22	PERMIT
1	02/13/23	COUNTY COMMENTS

PROJECT NO.:	21-5068
DRAWN BY:	R. SCHMIDT
PROJECT MANAGER:	R. SCHMIDT
CHECKED BY:	J. SHARIT

THIS DRAWING IS COPYRIGHTED AND IS THE SOLE PROPERTY OF THE OWNER. IT IS PRODUCED SOLELY FOR USE BY THE OWNER AND ITS AFFILIATES. REPRODUCTION OR USE OF THIS DRAWING AND/OR THE INFORMATION CONTAINED IN IT IS FORBIDDEN WITHOUT THE WRITTEN PERMISSION OF THE OWNER.

SMW ENGINEERING GROUP, INC.
TOGETHER PLANNING A BETTER TOMORROW
12979 N. TELECOM PARKWAY
TEMPLE TERRACE, FL 33637
(813) 615-1422
CERTIFICATE OF AUTHORIZATION 33693

GULFSTREAM TOWERS
127 W.FAIRBANKS AVE, STE 469
WINTER PARK, FLORIDA 32789

THIS DOCUMENT HAS BEEN ELECTRONICALLY SIGNED AND SEALED BY JEREMY D. SHARIT, PE (#75137) USING A DIGITAL SIGNATURE IN ACCORDANCE WITH F.A.C. 61G15-23.004, WITH A DIGITAL CERTIFICATE ISSUED BY ENTRUST, INC. PLEASE REFERENCE SHEET T1 TO VIEW THE SIGNATURE AND VERIFY ITS PROPERTIES. PRINTED COPIES OF THIS DOCUMENT ARE NOT CONSIDERED SIGNED AND SEALED AND THE SIGNATURE MUST BE VERIFIED ON ANY ELECTRONIC COPIES.
JEREMY D. SHARIT P.E. FL LICENSE 75137

FL208
SR528 & SR407

SR407 / CHALLENGER MEMORIAL PARKWAY
(ADDRESS TO BE ASSIGNED)
COCOA, FLORIDA 32927
(BREVARD COUNTY)

SHEET NAME
OVERALL SITE PLAN

SHEET NUMBER
C-1

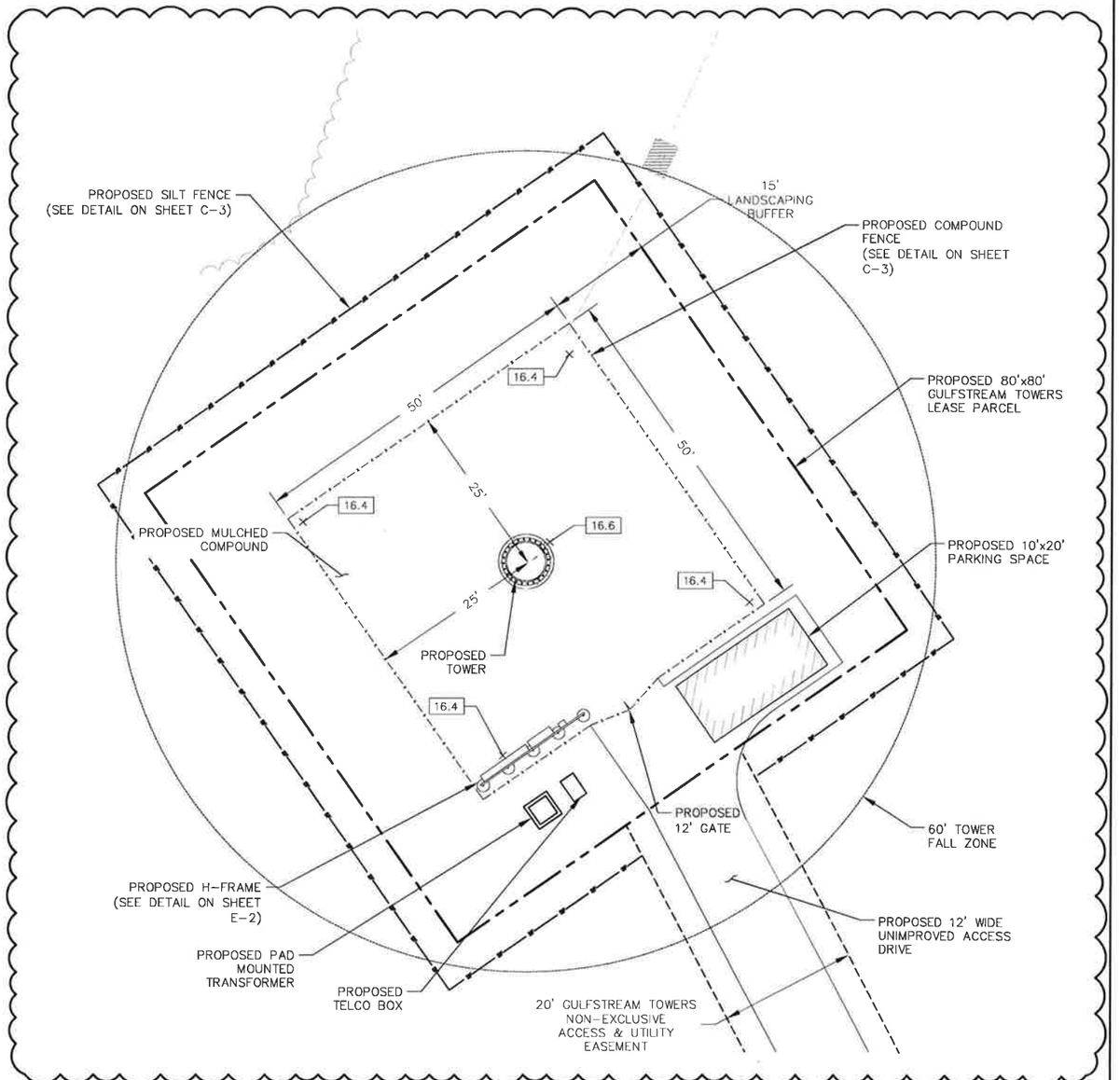

LEGEND

	PROPOSED FENCE
	TOWER LEASE PARCEL
	EXISTING PARENT TRACT PROPERTY LINE
+135.0	EXISTING SPOT ELEVATION
135.0	PROPOSED SPOT ELEVATION
	PROPOSED SILT FENCE
	EXISTING TREE TO BE REMOVED
104	EXISTING MINOR CONTOUR LINE
105	EXISTING MAJOR CONTOUR LINE
104	PROPOSED MINOR CONTOUR LINE
105	PROPOSED MAJOR CONTOUR LINE

20' 0' 10' 20'

FOR 24"x36" DRAWINGS
GRAPHIC SCALE: 1" = 10'
FOR 11"x17" DRAWINGS
GRAPHIC SCALE: 1" = 20'

COMPOUND LAYOUT — SCALE AS NOTED — 1

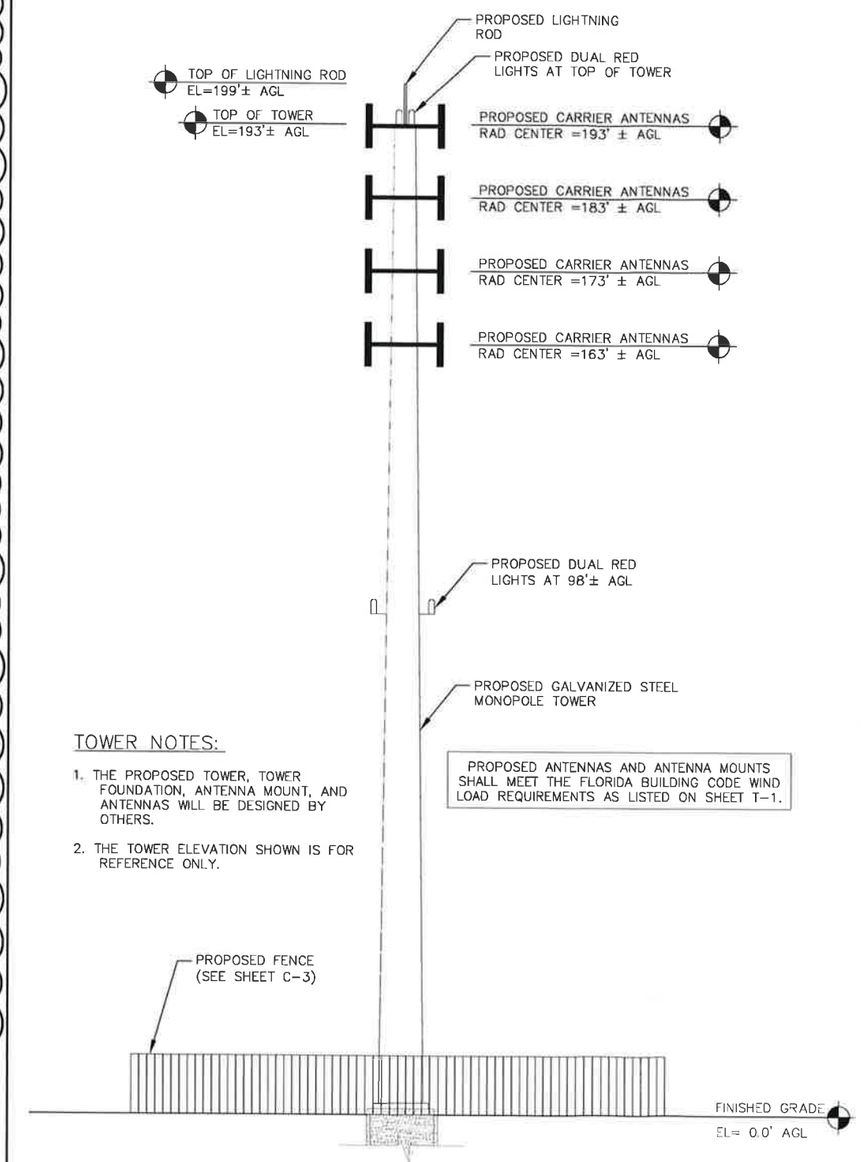

PROPOSED ANTENNAS AND ANTENNA MOUNTS SHALL MEET THE FLORIDA BUILDING CODE WIND LOAD REQUIREMENTS AS LISTED ON SHEET T-1.

TOWER NOTES:

1. THE PROPOSED TOWER, TOWER FOUNDATION, ANTENNA MOUNT, AND ANTENNAS WILL BE DESIGNED BY OTHERS.
2. THE TOWER ELEVATION SHOWN IS FOR REFERENCE ONLY.

TOWER ELEVATION — NTS — 2

REV	DATE	DESCRIPTION
0	10/06/22	PERMIT
1	02/13/23	COUNTY COMMENTS

PROJECT NO.:	21-5068
DRAWN BY:	R. SCHMIDT
PROJECT MANAGER:	R. SCHMIDT
CHECKED BY:	J. SHARIT

THIS DRAWING IS COPYRIGHTED AND IS THE SOLE PROPERTY OF THE OWNER. IT IS PRODUCED SOLELY FOR USE BY THE OWNER AND ITS AFFILIATES. REPRODUCTION OR USE OF THIS DRAWING AND/OR THE INFORMATION CONTAINED IN IT IS FORBIDDEN WITHOUT THE WRITTEN PERMISSION OF THE OWNER.

SMW ENGINEERING GROUP, INC.
TOGETHER PLANNING A BETTER TOMORROW
12979 N TELECOM PARKWAY
TEMPLE TERRACE, FL 33637
(813) 615-1422
CERTIFICATE OF AUTHORIZATION 33693

GULFSTREAM TOWERS
127 W.FAIRBANKS AVE, STE 469
WINTER PARK, FLORIDA 32789

THIS DOCUMENT HAS BEEN ELECTRONICALLY SIGNED AND SEALED BY JEREMY D. SHARIT, PE (#75137) USING A DIGITAL SIGNATURE IN ACCORDANCE WITH F.A.C. 61G15-23.004, WITH A DIGITAL CERTIFICATE ISSUED BY ENTRUST, INC. PLEASE REFERENCE SHEET T1 TO VIEW THE SIGNATURE AND VERIFY ITS PROPERTIES. PRINTED COPIES OF THIS DOCUMENT ARE NOT CONSIDERED SIGNED AND SEALED AND THE SIGNATURE MUST BE VERIFIED ON ANY ELECTRONIC COPIES.
JEREMY D. SHARIT P.E. FL LICENSE 75137

FL208
SR528 & SR407

SR407 / CHALLENGER MEMORIAL PARKWAY
(ADDRESS TO BE ASSIGNED)
COCOA, FLORIDA 32927
(BREVARD COUNTY)

SHEET NAME
COMPOUND LAYOUT & TOWER ELEVATION

SHEET NUMBER
C-2

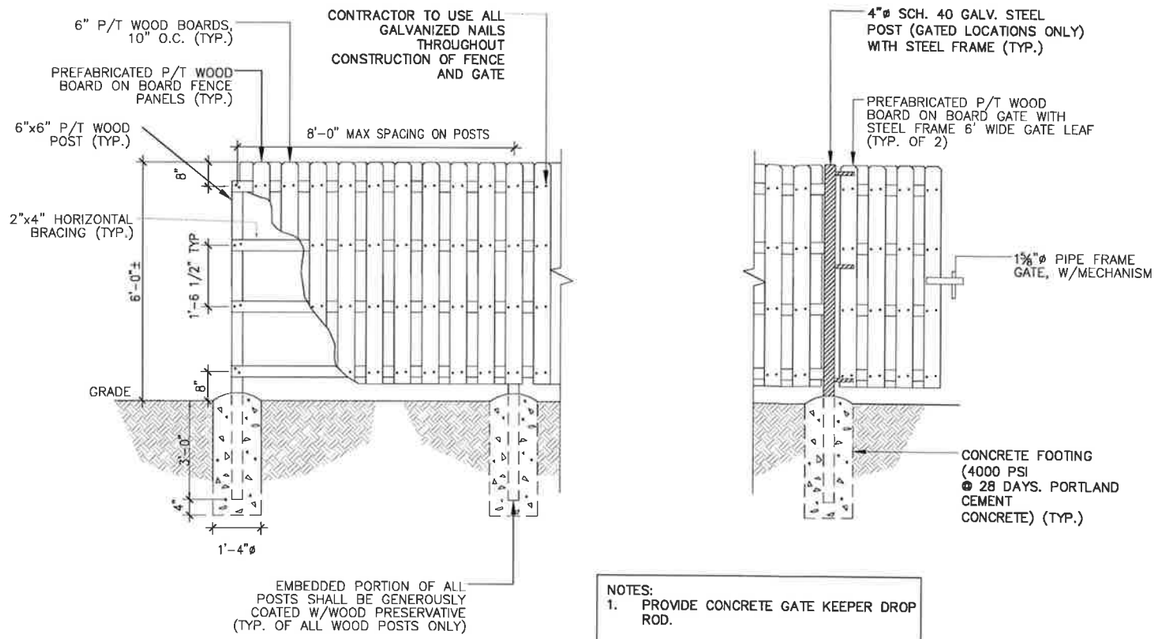

NOTES:
1. PROVIDE CONCRETE GATE KEEPER DROP ROD.
2. PROVIDE GATE CATCHES AT REQUIRED LOCATIONS

FENCE / GATE DETAIL — SCALE AS NOTED — 1

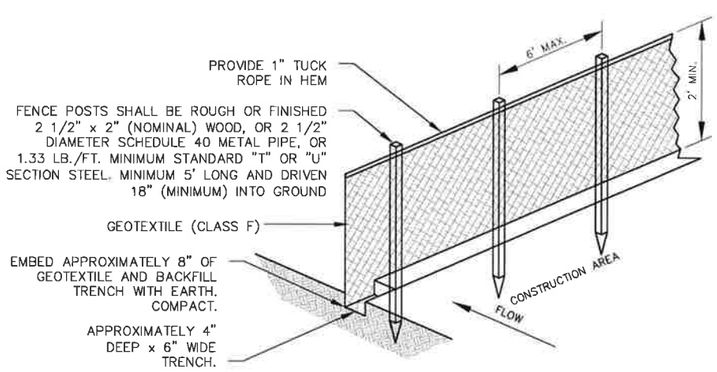

SILT FENCE NOTES:

1. GEOTEXTILE FABRIC TO BE FASTENED SECURELY TO FENCE POST BY WIRE TIES OR HOG RINGS. (3 FASTENERS PER POST.)
2. ENDS OF INDIVIDUAL ROLLS OF GEOTEXTILE SHALL BE SECURELY FASTENED TO A COMMON POST OR OVERLAPPED 3' MINIMUM.
3. THIS DEVICE IS INTENDED TO CONTROL SHEET FLOW ONLY. DO NOT USE IN AREAS OF CONCENTRATED FLOW WITH A DRAINAGE AREA OF 1/2 ACRE OR MORE.
4. ALL SILT FENCING SHALL BE INSTALLED PRIOR TO COMMENCING ANY LAND DISTURBING ACTIVITIES, AND SHALL REMAIN IN PLACE UNTIL ALL CONSTRUCTION ACTIVITIES ARE COMPLETED.

SILT FENCE DETAIL — NTS — 2

REV	DATE	DESCRIPTION
0	10/06/22	PERMIT
1	02/13/23	COUNTY COMMENTS

PROJECT NO.:	21-5068
DRAWN BY:	R. SCHMIDT
PROJECT MANAGER:	R. SCHMIDT
CHECKED BY:	J. SHARIT

THIS DRAWING IS COPYRIGHTED AND IS THE SOLE PROPERTY OF THE OWNER. IT IS PRODUCED SOLELY FOR USE BY THE OWNER AND ITS AFFILIATES. REPRODUCTION OR USE OF THIS DRAWING AND/OR THE INFORMATION CONTAINED IN IT IS FORBIDDEN WITHOUT THE WRITTEN PERMISSION OF THE OWNER.

SMW ENGINEERING GROUP, INC.
TOGETHER PLANNING A BETTER TOMORROW
12979 N TELECOM PARKWAY
TEMPLE TERRACE, FL 33637
(813) 615-1422
CERTIFICATE OF AUTHORIZATION 33693

GULFSTREAM TOWERS
127 W.FAIRBANKS AVE, STE 469
WINTER PARK, FLORIDA 32789

THIS DOCUMENT HAS BEEN ELECTRONICALLY SIGNED AND SEALED BY JEREMY D. SHARIT, PE (#75137) USING A DIGITAL SIGNATURE IN ACCORDANCE WITH F.A.C. 61G15-23.004, WITH A DIGITAL CERTIFICATE ISSUED BY ENTRUST, INC. PLEASE REFERENCE SHEET T1 TO VIEW THE SIGNATURE AND VERIFY ITS PROPERTIES. PRINTED COPIES OF THIS DOCUMENT ARE NOT CONSIDERED SIGNED AND SEALED AND THE SIGNATURE MUST BE VERIFIED ON ANY ELECTRONIC COPIES.
JEREMY D. SHARIT P.E. FL LICENSE 75137

FL208
SR528 & SR407

SR407 / CHALLENGER MEMORIAL PARKWAY
(ADDRESS TO BE ASSIGNED)
COCOA, FLORIDA 32927
(BREVARD COUNTY)

SHEET NAME
CONSTRUCTION DETAILS

SHEET NUMBER
C-3

LANDSCAPE SCHEDULE

	SPECIES	HEIGHT (MIN.)	QUANTITY	SIZE	SPACING (MAX.)	COMMENTS
SHADE TREE	LIVE OAK (QUERCUS VIRGINIANA)	12' (MIN) AT PLANTING	7	2.5" D.B.H.	25' O.C.	XERISCAPE TOLERANT
SHRUBS	VIBURNUM (VIBURNUM ACERIFULIUM)	24" TALL (MIN) AT PLANTING	98	3 GALLON	5' O.C.	XERISCAPE TOLERANT, CAPABLE OF REACHING 48" WITHIN 24 MONTHS

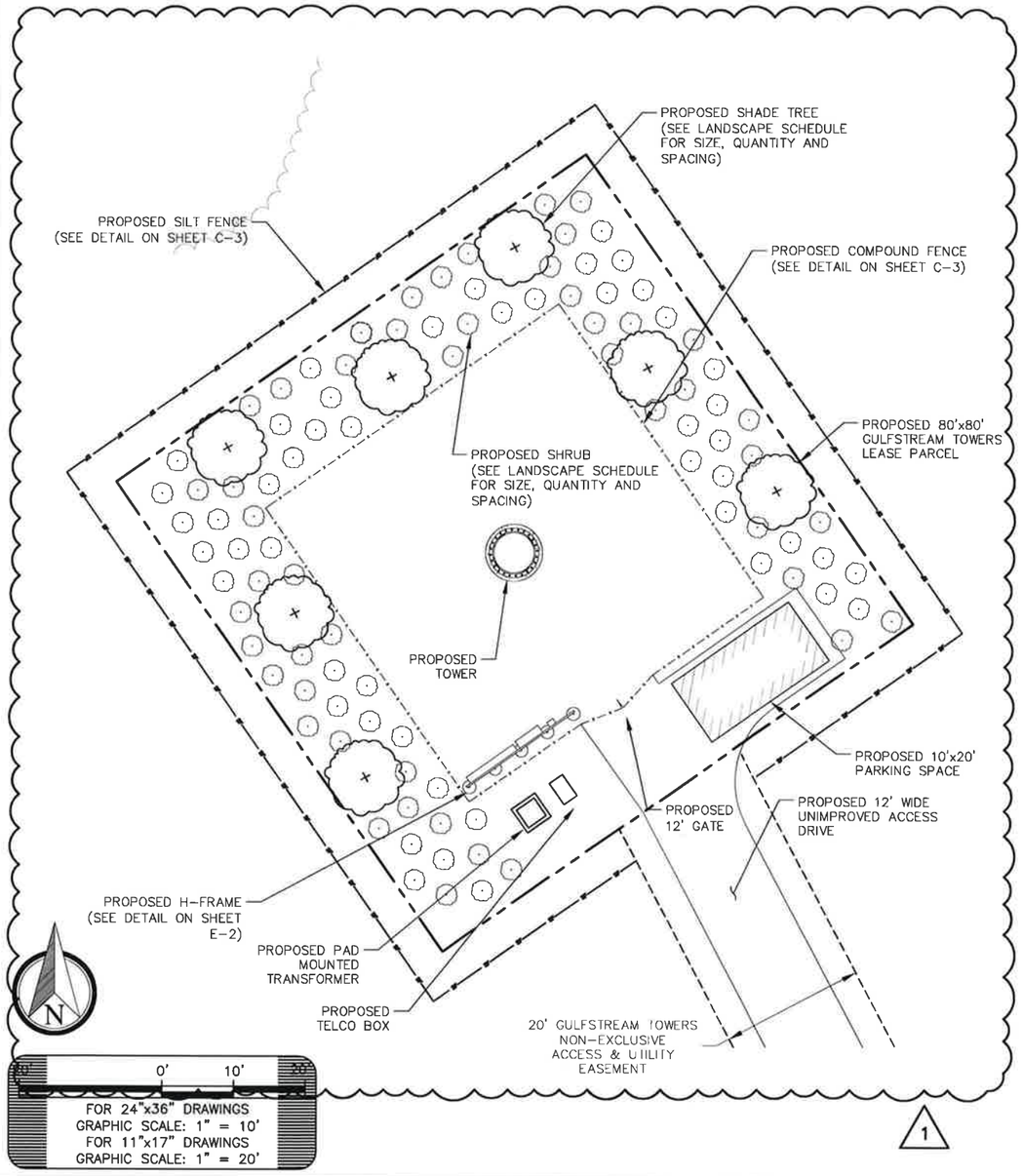

LANDSCAPE PLAN — SCALE AS NOTED | 1

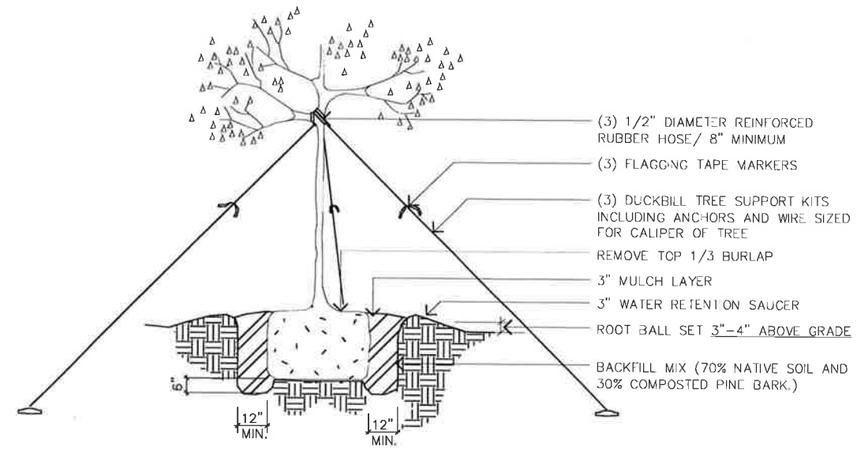

LANDSCAPING NOTES:

1. ALL TREES AND SHRUBS TO BE XERISCAPE SPECIES INDICATED ON PLANS. LANDSCAPING INTENDED TO SURVIVE ON NORMAL RAINFALL.
2. CONTRACTOR SHALL WARRANTY ALL PLANTINGS FOR ONE YEAR BEGINNING AT THE DATE OF ACCEPTANCE. CONTRACTOR SHALL REPLACE ANY DEAD OR DISCOLORED TREES/SHRUBS WITHIN THE WARRANTY PERIOD.
3. ALL LANDSCAPING SHALL BE FLORIDA GRADE 1 OR BETTER.

IRRIGATION NOTES:

1. WATERING PROGRAM SHALL ADJUST ACCORDINGLY BASED ON RAIN DAYS PROVIDING SUFFICIENT WATERING.
2. IRRIGATION SYSTEM SHALL PROVIDE 100% COVERAGE.
3. IRRIGATION SHALL INCLUDE A RAIN SENSOR.

TREE PLANTING DETAIL — NTS | 2

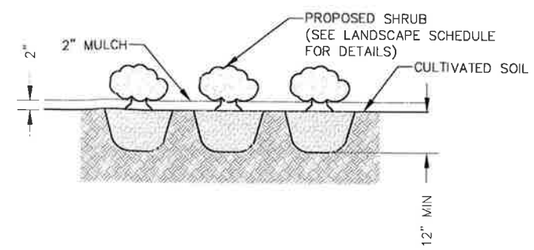

PLANTING PROCEDURES:

1. LAY OUT BED.
2. ROTOTILL BED TO 12" DEPTH.
3. INSTALL PLANTS AND MULCH.
4. WATER THOROUGHLY.
5. IF UNABLE TO ROTOTILL DUE TO TREE ROOTS, HAND DIG HOLE (FOR EACH PLANT) 12" WIDE AND 6" DEEPER THAN CONTAINER.

SHRUB PLANTING DETAIL — NTS | 3

REV	DATE	DESCRIPTION
0	10/06/22	PERMIT
1	02/13/23	COUNTY COMMENTS

PROJECT NO.:	21-5068
DRAWN BY:	R. SCHMIDT
PROJECT MANAGER:	R. SCHMIDT
CHECKED BY:	J. SHARIT

THIS DRAWING IS COPYRIGHTED AND IS THE SOLE PROPERTY OF THE OWNER. IT IS PRODUCED SOLELY FOR USE BY THE OWNER AND ITS AFFILIATES. REPRODUCTION OR USE OF THIS DRAWING AND/OR THE INFORMATION CONTAINED IN IT IS FORBIDDEN WITHOUT THE WRITTEN PERMISSION OF THE OWNER.

SMW ENGINEERING GROUP, INC.
TOGETHER PLANNING A BETTER TOMORROW
12979 N TELECOM PARKWAY
TEMPLE TERRACE, FL 33637
(813) 615-1422
CERTIFICATE OF AUTHORIZATION 33693

GULFSTREAM TOWERS
127 W.FAIRBANKS AVE, STE 469
WINTER PARK, FLORIDA 32789

THIS DOCUMENT HAS BEEN ELECTRONICALLY SIGNED AND SEALED BY JEREMY D. SHARIT, PE (#75137) USING A DIGITAL SIGNATURE IN ACCORDANCE WITH F.A.C. 61G15-23.004, WITH A DIGITAL CERTIFICATE ISSUED BY ENTRUST, INC. PLEASE REFERENCE SHEET T1 TO VIEW THE SIGNATURE AND VERIFY ITS PROPERTIES. PRINTED COPIES OF THIS DOCUMENT ARE NOT CONSIDERED SIGNED AND SEALED AND THE SIGNATURE MUST BE VERIFIED ON ANY ELECTRONIC COPIES.
JEREMY D. SHARIT P.E. FL LICENSE 75137

FL208
SR528 & SR407

SR407 / CHALLENGER MEMORIAL PARKWAY
(ADDRESS TO BE ASSIGNED)
COCOA, FLORIDA 32927
(BREVARD COUNTY)

SHEET NAME
LANDSCAPE PLAN & PLANTING DETAILS

SHEET NUMBER
L-1

IRRIGATION PARTS LIST / LEGEND

QUANTITY	SYMBOL	DESCRIPTION	PRESSURE	FLOW	RADIUS
16	●	RAIN BIRD BUBBLER HEAD*	30	1.85	10
158 L.F. ±	—•—	DRIP LINE			
1		HUNTER PC-300 CONTROLLER*			
1		HUNTER MINI-CLIK RAIN SENSOR*			

* OR APPROVED EQUAL

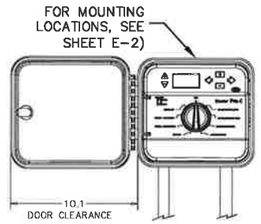

IRRIGATION CONTROLLER
NOT TO SCALE

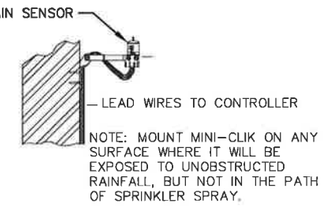

RAIN SENSOR
NOT TO SCALE

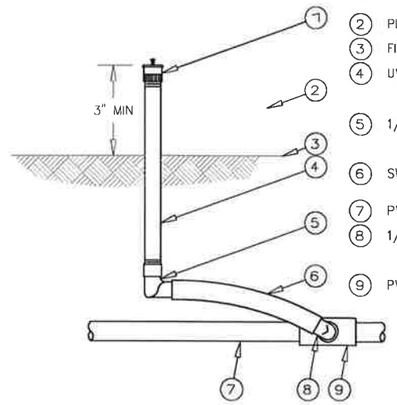

BUBBLER DETAIL
NOT TO SCALE

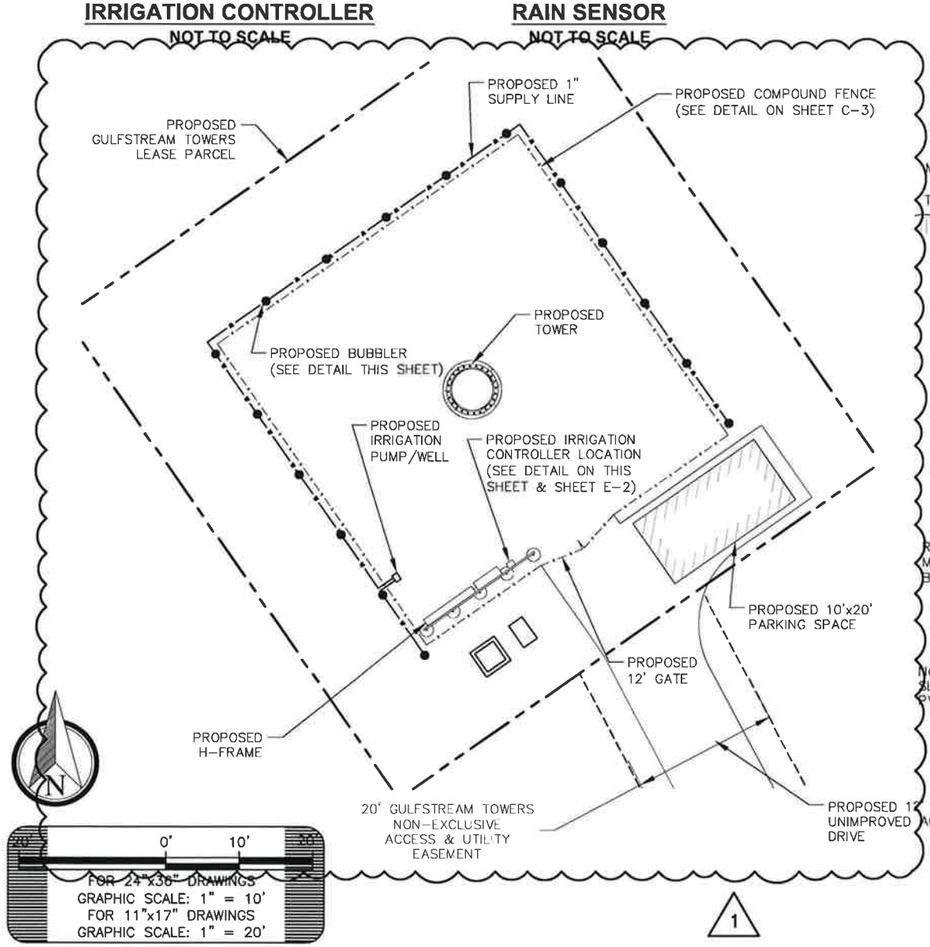

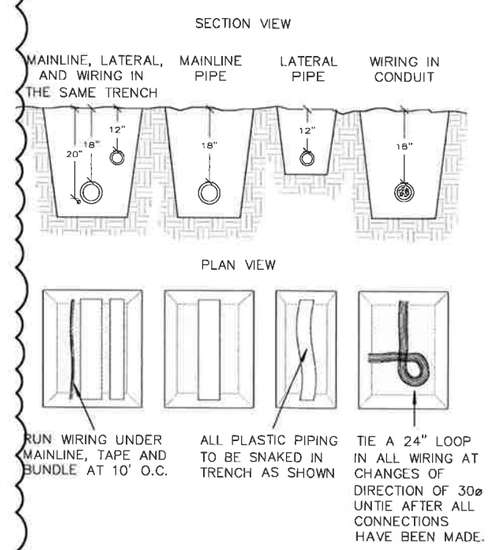

NOTE:
SLEEVE BELOW ALL HARDSCAPE ELEMENTS WITH SCHEDULE 40 PVC 2 TIMES THE DIAMETER OF THE PIPE WITHIN.

TRENCHING DETAIL
NOT TO SCALE

IRRIGATION NOTES:

1. IRRIGATION SYSTEM DESIGN REQUIREMENTS: 10 GPM @ A MINIMUM OF 60 PSI AT THE POINT OF CONNECTION. THE IRRIGATION CONTRACTOR SHALL VERIFY AVAILABLE GPM AND PSI PRIOR TO INSTALLATION OF SYSTEM.
2. DO NOT WILLFULLY INSTALL THE IRRIGATION SYSTEM AS SHOWN ON THE DRAWINGS WHEN IT IS OBVIOUS IN THE FIELD THAT CONDITIONS EXIST THAT MIGHT NOT HAVE BEEN CONSIDERED IN THE DESIGN PROCESS. FOR EXAMPLE: OBSTRUCTIONS, GRADE DIFFERENCES, WATER LEVELS, DIMENSIONAL DIFFERENCES, ETC.
3. PIPING MAY SOMETIMES BE INDICATED AS BEING LOCATED IN UNLIKELY AREAS: I.E., UNDER BUILDINGS OR PAVEMENT, OUTSIDE OF PROPERTY LINES, IN LAKES OR DITCHES, ETC. THIS IS DONE FOR GRAPHIC CLARITY ONLY. WHENEVER POSSIBLE, PIPING IS TO BE INSTALLED IN OPEN, "GREEN" AREAS.
4. PIPE SIZES SHALL CONFORM TO THOSE ON THE DRAWINGS. SUBSTITUTING WITH SMALLER PIPE SIZES WILL NOT BE PERMITTED, WITHOUT THE ENGINEERS APPROVAL.
5. TRENCH DEPTHS SHALL BE SUFFICIENT TO ALLOW THE FOLLOWING MINIMUM DEPTHS OF COVER:
   ALL MAINLINE PIPING 18" MINIMUM COVER
   ALL LATERAL PIPING 12" MINIMUM COVER
   ALL SLEEVE PIPING 18" MINIMUM COVER
6. UNLESS OTHERWISE INDICATED, ALL SLEEVES ARE TO BE PVC SCH 40 AND TWO (2) NOMINAL SIZES LARGER THAN THE PIPE TO BE SLEEVED. FOR EXAMPLE: THE SLEEVE FOR A 2" PIPE SHALL BE 3". NO IRRIGATION SLEEVE SHALL BE SMALLER THAN 2".
7. WHEREVER PRACTICAL, INSTALL VALVES IN MULCHED BEDS AND/OR OUT OF HIGH TRAFFIC AREAS. ALL VALVES, FLUSH VALVES AND WIRE SPLICES SHALL BE INSTALLED IN CARSON STRUCTURAL FOAM "PLASTIC" VALVES BOXES AS FOLLOWS:
   REMOTE CONTROL VALVES #1419B-12, 12" STD. RECT. BOX
   ISOLATION GATE VALVES #910-12, 10" ROUND PIT
   WIRE SPLICES #910-12, 10" ROUND PIT
8. REFER TO VALVE DESIGNATION SYMBOLS FOR CONTROLLER, STATION NUMBER AND DESIGNED FLOW RATE FOR EACH REMOTE CONTROL VALVE.
9. ALL 24 VOLT CONTROL CABLE TO BE UL LISTED, SINGLE STRAND, TYPE UF 600 VOLT CONTROL CABLE. SIZE AND COLOR AS FOLLOWS: COMMON WIRES-SIZE AWG #12 OR LARGER AND WHITE IN COLOR.
10. HOT WIRES-SIZE AWG #14 OR LARGER AND RED IN COLOR.
11. SPARE WIRES-SIZE AWG #14 OR LARGER AND BLUE IN COLOR.
12. ALL SPLICES TO THE 24 VOLT CONTROL WIRING SHALL BE MADE WITH KING TECHNOLOGY (KING 6) SILICONE-FILLED SAFETY CONNECTORS.
13. ALL CONTROL VALVE WIRES SHALL BE BUNDLED AND TAPED TOGETHER AT 20' INTERVALS AND PLACED ALONG THE SIDE OF THE MAINLINE PIPE.
14. ALL POP-UP SPRINKLER HEADS SHALL BE INSTALLED LEVEL AND FLUSH TO GRADE. MOUNT ALL SPRINKLERS ON FLEXIBLE CONNECTIONS AS FOLLOWS: 1/2" INLET SPRAY HEADS 18" OF 1/2" KAF-FLEX FLEXIBLE PVC HOSE 3/4" INLET ROTOR HEADS 18" OF 3/4" KAF-FLEX FLEXIBLE PVC HOSE 1" INLET ROTOR HEADS 1" MARLEX THREE ELBOW SWING JOINTS.
15. LOCATION OF ALL SPRINKLER HEADS SHALL BE SITE ADJUSTED TO MINIMIZE WATER OVERTHROW ONTO BUILDING SURFACES AND WALKWAYS.
16. EXACT CONTROLLER LOCATION(S) SHALL BE COORDINATED WITH AN OWNER'S REPRESENTATIVE PRIOR TO INSTALLATION. UNLESS OTHERWISE STATED, THE OWNER SHALL PROVIDE 110 VOLT POWER TO THE CONTROLLER LOCATION(S). THE IRRIGATION CONTRACTOR IS RESPONSIBLE FOR THE CONNECTION FROM THE POWER SOURCE TO THE CONTROLLER(S).
17. PROPERLY GROUND EACH CONTROLLER TO A 5/8" X 8' COPPER CLAD GROUND ROD WITH AWG #6 BARE SOLID COPPER WIRE. A PROPER GROUND SHOULD HAVE 15 OHMS OR LESS RESISTANCE TO EARTH. USE OF MULTIPLE GROUND RODS MAY BE NECESSARY TO ACHIEVE THE DESIRED RESISTANCE READING.
18. THE RAIN SHUT-OFF DEVICE SHALL BE INSTALLED TO MEET LOCAL CODES AND/OR MINIMUM MANUFACTURER'S RECOMMENDATIONS. OBSTRUCTIONS, VANDALISM AND EASE OF SERVICE SHALL BE CONSIDERED IN LOCATING THE DEVICE.
19. THE NEW 5" CASED WELL(S) SHALL BE INSTALLED BY A LICENSED WELL CONTRACTOR IN ACCORDANCE WITH ALL APPLICABLE RULES AND REGULATIONS AS SET FORTH BY THE LOCAL "WATER MANAGEMENT DISTRICT". EACH WELL SHALL BE CAPABLE OF YIELDING 100 GPM FOR FOUR (4) CONTINUOUS HOURS WITH NO FLUCTUATION IN DRAWDOWN. IF FOR ANY REASON THE WELL(S) CAN NOT BE DRILLED TO PERFORM AS SPECIFIED HEREIN, THE WELL CONTRACTOR SHALL NOTIFY THE LANDSCAPE ARCHITECT IMMEDIATELY.
20. UNLESS OTHERWISE STATED, THE OWNER SHALL PROVIDE 230 VOLT, SINGLE PHASE POWER TO THE PUMP LOCATION. THE IRRIGATION CONTRACTOR IS RESPONSIBLE FOR THE CONNECTION FROM THE POWER SOURCE TO THE PUMP.
21. ANY OTHER EQUIPMENT REQUIRED THAT IS NOT OTHER WISE DETAILED OR SPECIFIED SHALL BE INSTALLED AS PER MANUFACTURER'S RECOMMENDATIONS AND SPECIFICATIONS.

REV	DATE	DESCRIPTION
0	10/06/22	PERMIT
1	02/13/23	COUNTY COMMENTS

PROJECT NO.:	21-5068
DRAWN BY:	R. SCHMIDT
PROJECT MANAGER:	R. SCHMIDT
CHECKED BY:	J. SHARIT

THIS DRAWING IS COPYRIGHTED AND IS THE SOLE PROPERTY OF THE OWNER. IT IS PRODUCED SOLELY FOR USE BY THE OWNER AND ITS AFFILIATES. REPRODUCTION OR USE OF THIS DRAWING AND/OR THE INFORMATION CONTAINED IN IT IS FORBIDDEN WITHOUT THE WRITTEN PERMISSION OF THE OWNER.

SMW ENGINEERING GROUP, INC.
TOGETHER PLANNING A BETTER TOMORROW
12979 N TELECOM PARKWAY
TEMPLE TERRACE, FL 33637
(813) 615-1422
CERTIFICATE OF AUTHORIZATION 33693

GULFSTREAM TOWERS
127 W.FAIRBANKS AVE, STE 469
WINTER PARK, FLORIDA 32789

THIS DOCUMENT HAS BEEN ELECTRONICALLY SIGNED AND SEALED BY JEREMY D. SHARIT, PE (#75137) USING A DIGITAL SIGNATURE IN ACCORDANCE WITH F.A.C. 61G15-23.004, WITH A DIGITAL CERTIFICATE ISSUED BY ENTRUST, INC. PLEASE REFERENCE SHEET T1 TO VIEW THE SIGNATURE AND VERIFY ITS PROPERTIES. PRINTED COPIES OF THIS DOCUMENT ARE NOT CONSIDERED SIGNED AND SEALED AND THE SIGNATURE MUST BE VERIFIED ON ANY ELECTRONIC COPIES.
JEREMY D. SHARIT P.E. FL LICENSE 75137

FL208
SR528 & SR407

SR407 / CHALLENGER MEMORIAL PARKWAY
(ADDRESS TO BE ASSIGNED)
COCOA, FLORIDA 32927
(BREVARD COUNTY)

SHEET NAME
IRRIGATION PLAN & DETAILS

SHEET NUMBER
L-2

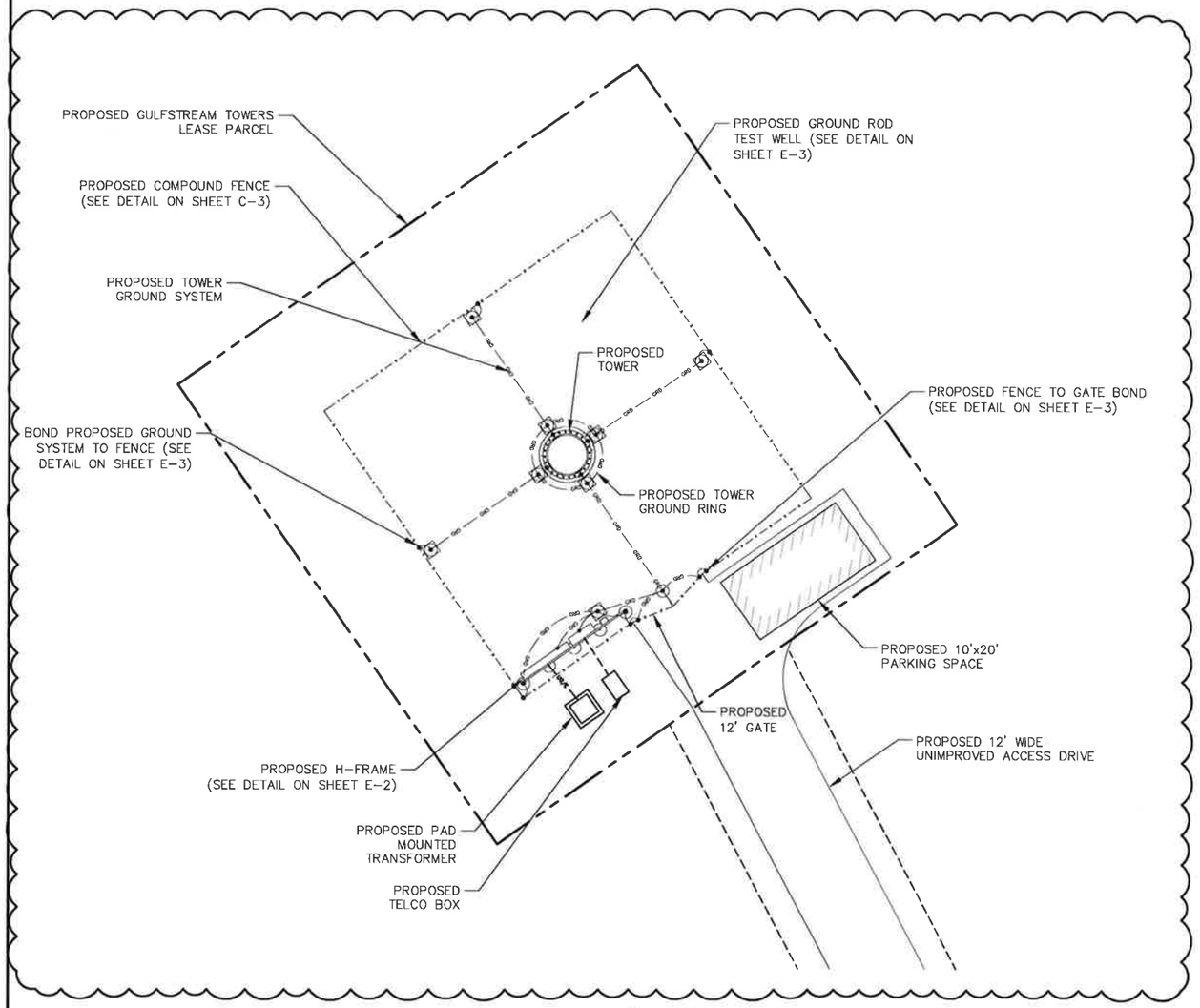

1

POWER NOTES AND SPECIFICATIONS:

1. ALL ELECTRICAL WORK SHALL COMPLY WITH NEC, STATE, AND LOCAL CODES.
2. CONTRACTOR SHALL OBTAIN ANY ADDITIONAL TOWER OWNER/CARRIER DOCUMENTS AND DRAWINGS AND REVIEW FOR ADDITIONAL DETAILS AND REQUIREMENTS THAT MAY NOT BE SHOWN IN THESE DRAWINGS. CONTRACTOR SHALL COMPLY WITH ANY ADDITIONAL TOWER OWNER/CARRIER SPECIFICATIONS AND REQUIREMENTS THAT MAY BE ADDRESSED IN OTHER DOCUMENTS AND DRAWINGS.
3. PRIOR TO PURCHASING EQUIPMENT, THE CONTRACTOR SHALL CONTACT THE ELECTRIC UTILITY AND OBTAIN IN WRITING THE MAXIMUM AVAILABLE FAULT CURRENT AT THE UTILITY SERVICE POINT. THE CONTRACTOR SHALL ENSURE ALL ELECTRICAL EQUIPMENT, CIRCUIT BREAKERS, DISCONNECTS, FUSES, AND PANELBOARDS HAVE A FAULT CURRENT INTERRUPTING RATING GREATER THAN THE AVAILABLE FAULT CURRENT. IN NO CASE SHALL THE FAULT CURRENT INTERRUPTING RATING BE LESS THAN 22,000 AMPS.
4. THE GROUNDED SERVICE CONDUCTOR (NEUTRAL CONDUCTOR) SHALL BE GROUNDED AT THE SERVICE DISCONNECT ONLY.
5. ALL POWER CIRCUITS SHALL USE COPPER CONDUCTORS WITH THHN/THWN INSULATION. ALL TERMINATIONS SHALL BE RATED FOR AT LEAST 75 DEGREES C.
6. CONTRACTOR SHALL PROVIDE GROUND FAULT CIRCUIT INTERRUPTER (GFCI) TYPE RECEPTACLES FOR ALL UTILITY RECEPTACLES.
7. CONTRACTOR SHALL ENSURE ALL NEUTRAL CONDUCTORS HAVE WHITE INSULATION AND EQUIPMENT GROUND CONDUCTORS HAVE GREEN INSULATION. COLOR TAPE IDENTIFICATION OF THESE CONDUCTORS IS NOT ALLOWED.

GROUNDING NOTES AND SPECIFICATIONS:

1. THE GROUND RING SHALL CONSIST OF 2 AWG BARE SOLID TINNED COPPER CONDUCTOR, UNLESS NOTED OTHERWISE, BURIED AT 30" BELOW FINISHED GRADE AND 2 FEET OUTSIDE OF EQUIPMENT PAD.
2. ALL GROUNDING CONNECTIONS SHALL BE MADE USING AN EXOTHERMIC WELD, UNLESS NOTED OTHERWISE. CLEAN ALL SURFACES PRIOR TO CONNECTION. SPRAY EXOTHERMICALLY WELDED CONNECTIONS WITH ANTI-OXIDATION PAINT.
3. ALL GROUNDING DEVICES SHALL BE UL APPROVED OR LISTED FOR THEIR INTENDED USE.
4. ROUTE ALL GROUND CONDUCTORS ALONG THE SHORTEST ROUTE AND AVOID SHARP BENDS. THE BEND RADIUS SHALL NOT BE LESS THAN 12".
5. GROUND ROD SPACING AS SHOWN.
6. PRIOR TO INSTALLING LUGS ON GROUND CONDUCTORS OR BOLTING GROUND LUGS, APPLY THOMAS & BETTS KOPR-SHIELD OR EQUIVALENT.
7. SPLIT BOLTS SHALL NOT BE USED.
8. ENSURE THAT NO CONTINUOUS METAL RING SURROUNDS A GROUNDING CONDUCTOR. USE PVC SUPPORT CLAMPS. ENSURE ANY GROUNDING CONDUCTORS RUN THROUGH METAL CONDUIT IS BONDED TO THE CONDUIT AT BOTH ENDS.
9. CONTRACTOR SHALL BOND THE TOWER TO THE GROUND RING AT FOUR POINTS USING 2 AWG BARE SOLID TINNED COPPER CONDUCTORS AND EXOTHERMIC WELDS.
10. CONTRACTOR SHALL BOND THE TELCO CABINET GROUND BAR TO THE GROUND RING USING 2 AWG BARE SOLID TINNED COPPER CONDUCTORS WITH 2-HOLE COMPRESSION LUGS ABOVE GRADE AND EXOTHERMIC WELDS BELOW GRADE.
11. ALL GROUNDING/BONDING CONDUCTORS RUN FROM ABOVE GRADE TO THE GROUND RING SHALL BE INSTALLED IN 3/4" PVC CONDUIT FROM 1 FOOT ABOVE GRADE AND SEALED WITH A SILICONE SEALANT.
12. GROUND SYSTEMS SHALL BE TESTED AND SHALL HAVE A RESISTANCE OF 5 OHMS OR LESS. IF RESISTANCE VALUE IS EXCEEDED , NOTIFY TOWER OWNER/CARRIER FOR FURTHER INSTRUCTIONS. SUBMIT A COPY OF THE TEST REPORT TO TOWER OWNER AND CARRIER.

LEGEND

- PROPOSED GROUND ROD TEST WELL
- PROPOSED GROUND ROD
- PROPOSED EXOTHERMIC WELD
- PROPOSED MECHANICAL BOND
- PROPOSED GROUNDING SYSTEM
- PROPOSED POWER ROUTING
- PROPOSED TELCO ROUTING

N

20' 0' 10' 20'

FOR 24"x36" DRAWINGS
GRAPHIC SCALE: 1" = 10'
FOR 11"x17" DRAWINGS
GRAPHIC SCALE: 1" = 20'

SITE SERVICE ROUTING AND GROUNDING PLAN

SCALE AS NOTED | 1

REV	DATE	DESCRIPTION
0	10/06/22	PERMIT
1	02/13/23	COUNTY COMMENTS

PROJECT NO.:	21-5068
DRAWN BY:	R. SCHMIDT
PROJECT MANAGER:	R. SCHMIDT
CHECKED BY:	J. SHARIT

THIS DRAWING IS COPYRIGHTED AND IS THE SOLE PROPERTY OF THE OWNER. IT IS PRODUCED SOLELY FOR USE BY THE OWNER AND ITS AFFILIATES. REPRODUCTION OR USE OF THIS DRAWING AND/OR THE INFORMATION CONTAINED IN IT IS FORBIDDEN WITHOUT THE WRITTEN PERMISSION OF THE OWNER.

SMW ENGINEERING GROUP, INC.
TOGETHER PLANNING A BETTER TOMORROW
12979 N TELECOM PARKWAY
TEMPLE TERRACE, FL 33637
(813) 615-1422
CERTIFICATE OF AUTHORIZATION 33693

GULFSTREAM TOWERS
127 W.FAIRBANKS AVE., STE 469
WINTER PARK, FLORIDA 32789

THIS DOCUMENT HAS BEEN ELECTRONICALLY SIGNED AND SEALED BY JEREMY D. SHARIT, PE (#75137) USING A DIGITAL SIGNATURE IN ACCORDANCE WITH F.A.C. 61G15-23.004, WITH A DIGITAL CERTIFICATE ISSUED BY ENTRUST, INC. PLEASE REFERENCE SHEET T1 TO VIEW THE SIGNATURE AND VERIFY ITS PROPERTIES. PRINTED COPIES OF THIS DOCUMENT ARE NOT CONSIDERED SIGNED AND SEALED AND THE SIGNATURE MUST BE VERIFIED ON ANY ELECTRONIC COPIES.
JEREMY D. SHARIT P.E. FL LICENSE 75137

FL208
SR528 & SR407

SR407 / CHALLENGER MEMORIAL PARKWAY
(ADDRESS TO BE ASSIGNED)
COCOA, FLORIDA 32927
(BREVARD COUNTY)

SHEET NAME
SITE SERVICE ROUTING & GROUNDING PLAN

SHEET NUMBER
E-1

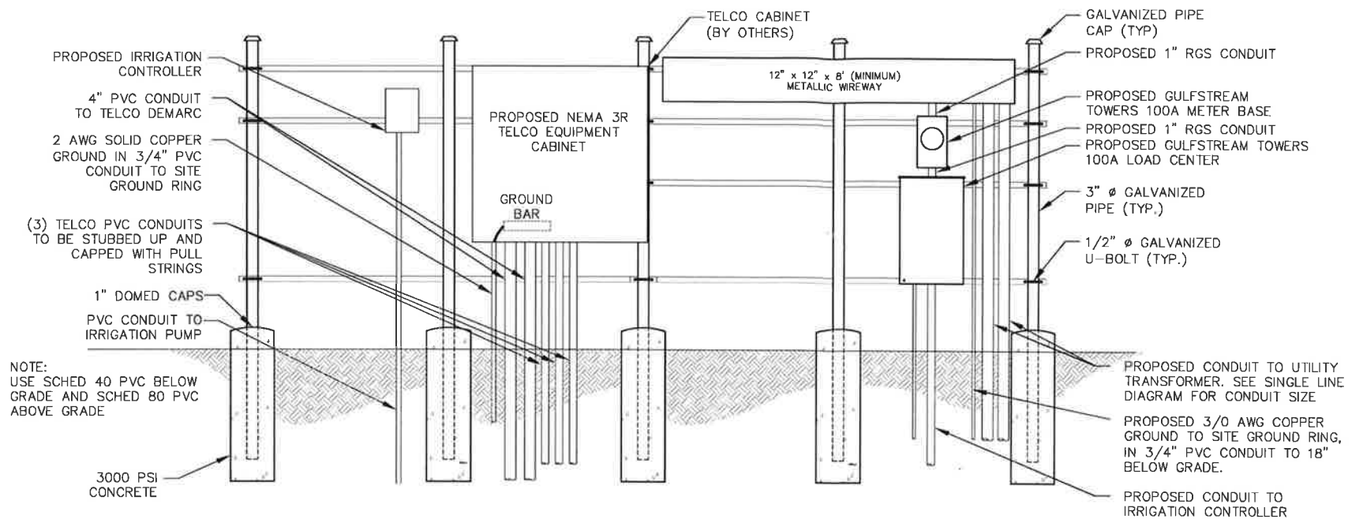

H-FRAME DETAIL NTS 1

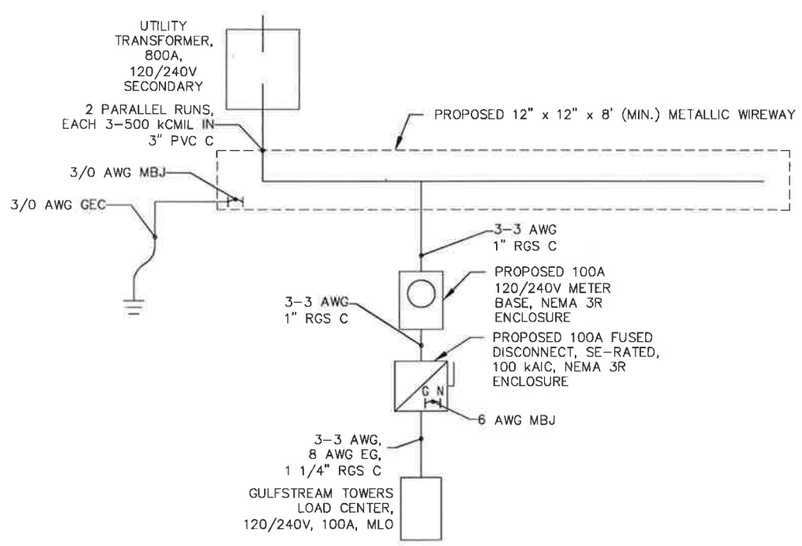

SINGLE LINE DIAGRAM NTS 2

NOTES AND SPECIFICATIONS:

1. ALL ELECTRICAL WORK SHALL COMPLY WITH NEC, STATE, AND LOCAL CODES.
2. CONTRACTOR SHALL OBTAIN OWNER/TENANT EQUIPMENT DRAWINGS AND REVIEW FOR ADDITIONAL DETAILS AND REQUIREMENTS THAT MAY NOT BE SHOWN IN THESE DRAWINGS. CONTRACTOR SHALL COMPLY WITH ANY ADDITIONAL OWNER/TENANT SPECIFICATIONS AND REQUIREMENTS THAT MAY BE ADDRESSED IN THE EQUIPMENT SHELTER DRAWINGS.
3. PRIOR TO PURCHASING EQUIPMENT, CONTRACTOR SHALL CONTACT THE LOCAL UTILITY & OBTAIN IN WRITING THE MAXIMUM AVAILABLE FAULT CURRENT AT THE UTILITY SERVICE POINT. THE CONTRACTOR SHALL ENSURE ALL ELECTRICAL EQUIPMENT, CIRCUIT BREAKERS, DISCONNECTS, FUSES, AND PANELBOARDS HAVE A FAULT CURRENT INTERRUPTING RATING GREATER THAN THE AVAILABLE FAULT CURRENT. IN NO CASE SHALL THE FAULT CURRENT INTERRUPTING RATING BE LESS THAN 10,000 AMPS.
4. THE GROUNDED SERVICE CONDUCTOR (NEUTRAL CONDUCTOR) SHALL BE GROUNDED AT THE WIREWAY ONLY. N-G BONDING SHALL BE MADE AT BOTH THE WIREWAY AND AT EACH SERVICE DISCONNECT.
5. ALL POWER CIRCUITS SHALL USE COPPER CONDUCTORS WITH THHN/THWN INSULATION. ALL TERMINATIONS SHALL BE RATED FOR AT LEAST 75 DEGREES C.
6. CONTRACTOR SHALL PROVIDE GROUND FAULT CIRCUIT INTERRUPTER (GFCI) TYPE RECEPTACLES FOR ALL UTILITY RECEPTACLES.
7. CONTRACTOR SHALL ENSURE ALL NEUTRAL CONDUCTORS SMALLER THAN 4 AWG HAVE WHITE INSULATION AND ALL EQUIPMENT GROUND CONDUCTORS HAVE GREEN INSULATION. COLOR TAPE IDENTIFICATION OF THESE CONDUCTORS IS NOT ALLOWED.
8. BELOW GRADE CONDUIT SHALL BE SCHEDULE 40 PVC, ABOVE GRADE CONDUIT SHALL BE GALVANIZED RIGID CONDUIT. BELOW GRADE PVC CONDUIT SHALL TRANSITION TO GRC PRIOR TO RISING ABOVE GRADE. ALL FITTINGS SHALL BE SUITABLE FOR USE WITH THREADED RIGID CONDUIT. VERIFY CONDUIT TYPE WITH LOCAL CONSTRUCTION MANAGER AND ADJUST IF NECESSARY. ALL CONDUIT SHALL MEET NEC, STATE, AND LOCAL CODE REQUIREMENTS AS REQUIRED.

ELECTRICAL NOTES NTS 3

REV	DATE	DESCRIPTION
0	10/06/22	PERMIT
1	02/13/23	COUNTY COMMENTS

PROJECT NO.:	21-506B
DRAWN BY:	R. SCHMIDT
PROJECT MANAGER:	R. SCHMIDT
CHECKED BY:	J. SHARIT

THIS DRAWING IS COPYRIGHTED AND IS THE SOLE PROPERTY OF THE OWNER. IT IS PRODUCED SOLELY FOR USE BY THE OWNER AND ITS AFFILIATES. REPRODUCTION OR USE OF THIS DRAWING AND/OR THE INFORMATION CONTAINED IN IT IS FORBIDDEN WITHOUT THE WRITTEN PERMISSION OF THE OWNER.

SMW ENGINEERING GROUP, INC.
TOGETHER PLANNING A BETTER TOMORROW
12979 N TELECOM PARKWAY
TEMPLE TERRACE, FL 33637
(813) 615-1422
CERTIFICATE OF AUTHORIZATION 33693

GULFSTREAM TOWERS
127 W.FAIRBANKS AVE, STE 469
WINTER PARK, FLORIDA 32789

THIS DOCUMENT HAS BEEN ELECTRONICALLY SIGNED AND SEALED BY JEREMY D. SHARIT, PE (#75137) USING A DIGITAL SIGNATURE IN ACCORDANCE WITH F.A.C. 61G15-23.004, WITH A DIGITAL CERTIFICATE ISSUED BY ENTRUST, INC. PLEASE REFERENCE SHEET T1 TO VIEW THE SIGNATURE AND VERIFY ITS PROPERTIES. PRINTED COPIES OF THIS DOCUMENT ARE NOT CONSIDERED SIGNED AND SEALED AND THE SIGNATURE MUST BE VERIFIED ON ANY ELECTRONIC COPIES.
JEREMY D. SHARIT P.E. FL LICENSE 75137

FL208
SR528 & SR407

SR407 / CHALLENGER MEMORIAL PARKWAY
(ADDRESS TO BE ASSIGNED)
COCOA, FLORIDA 32927
(BREVARD COUNTY)

SHEET NAME
SINGLE LINE DIAGRAM & H-FRAME DETAIL

SHEET NUMBER
E-2

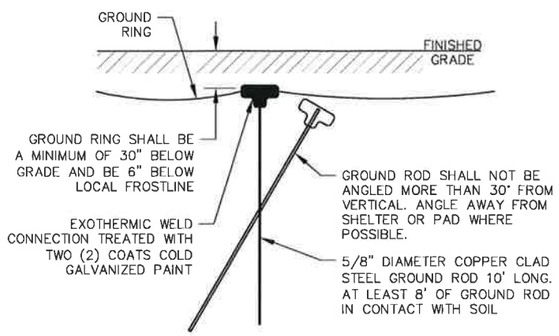

GROUND ROD DETAIL NTS 1

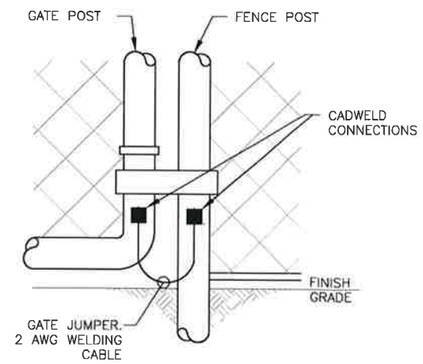

GATE BONDING DETAIL NTS 2

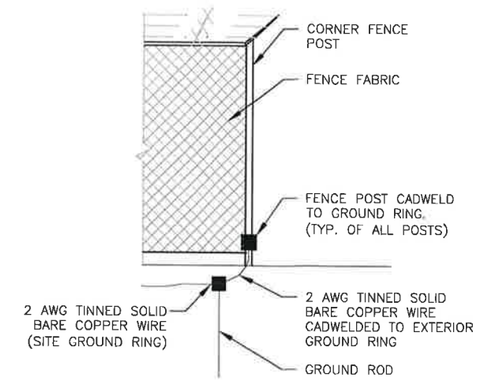

FENCE POST BONDING DETAIL NTS 3

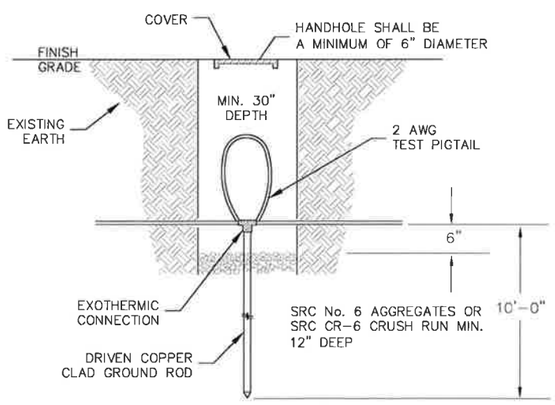

WELL SIZE OF 6" DIAMETER WITH 6" CLEARANCE BELOW EXOTHERMIC WELD CONNECTION ALLOWS FOR USE OF CLAMP-ON GROUND METERS FOR TESTING GROUND SYSTEM.

GROUND ROD TEST WELL DETAIL NTS 4

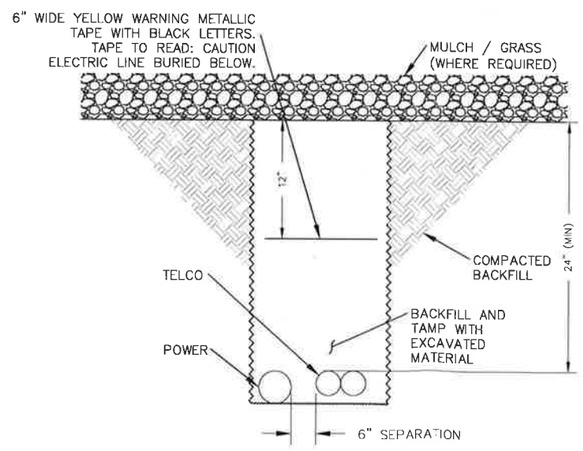

UTILITY TRENCH DETAIL NTS 5

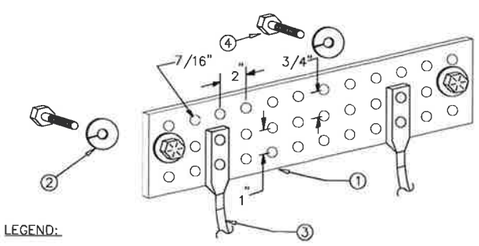

LEGEND:

1. COPPER GROUND BAR (TINNED), 1/4"X 4"X 20"
2. 5/8" LOCKWASHERS, H.K. PORTER OR APPROVED EQUIVALENT.
3. #2 TWO HOLE LONG BARRELL COMPRESSION LUG BY BURNDY OR APPROVED EQUIVALENT.
4. 5/8-11 X 1" HHCS BOLTS, H.K. PORTER OR APPROVED EQUIVALENT.

* APPLY A NO-OXIDATION COMPOUND BEHIND AND ON ALL CONNECTIONS TO GROUND BUSS BAR.

GROUND BAR DETAIL NTS 6

REV	DATE	DESCRIPTION
0	10/06/22	PERMIT
1	02/13/23	COUNTY COMMENTS

PROJECT NO.:	21-5068
DRAWN BY:	R. SCHMIDT
PROJECT MANAGER:	R. SCHMIDT
CHECKED BY:	J. SHARIT

THIS DRAWING IS COPYRIGHTED AND IS THE SOLE PROPERTY OF THE OWNER. IT IS PRODUCED SOLELY FOR USE BY THE OWNER AND ITS AFFILIATES. REPRODUCTION OR USE OF THIS DRAWING AND/OR THE INFORMATION CONTAINED IN IT IS FORBIDDEN WITHOUT THE WRITTEN PERMISSION OF THE OWNER.

SAW ENGINEERING GROUP, INC.
TOGETHER PLANNING A BETTER TOMORROW
12979 N TELECOM PARKWAY
TEMPLE TERRACE, FL 33637
(813) 615-1422
CERTIFICATE OF AUTHORIZATION 33693

GULFSTREAM TOWERS
127 W.FAIRBANKS AVE, STE 469
WINTER PARK, FLORIDA 32789

THIS DOCUMENT HAS BEEN ELECTRONICALLY SIGNED AND SEALED BY JEREMY D. SHARIT, PE (#75137) USING A DIGITAL SIGNATURE IN ACCORDANCE WITH F.A.C. 61G15-23.004, WITH A DIGITAL CERTIFICATE ISSUED BY ENTRUST, INC. PLEASE REFERENCE SHEET T1 TO VIEW THE SIGNATURE AND VERIFY ITS PROPERTIES. PRINTED COPIES OF THIS DOCUMENT ARE NOT CONSIDERED SIGNED AND SEALED AND THE SIGNATURE MUST BE VERIFIED ON ANY ELECTRONIC COPIES.
JEREMY D. SHARIT P.E. FL LICENSE 75137

FL208
SR528 & SR407

SR407 / CHALLENGER MEMORIAL PARKWAY
(ADDRESS TO BE ASSIGNED)
COCOA, FLORIDA 32927
(BREVARD COUNTY)

SHEET NAME
ELECTRICAL DETAILS

SHEET NUMBER
E-3